EMT-150-SSH

Magnetic Dimmable

Outdoor Stainless Steel Enclosure

Multi Tap: **12-15VAC**

Total Wattage: **150W max**

Input Voltage: **120V 60Hz**

EMCOD
ElectroMagnetic Component Optimal Design

www.emcod.com

Conforms to UL STD. 1838
Certified to CSA
STD. C22.2 № 250.0, 250.7

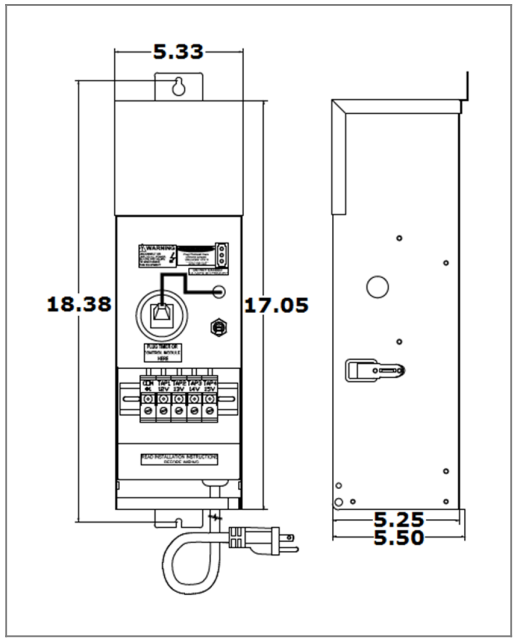

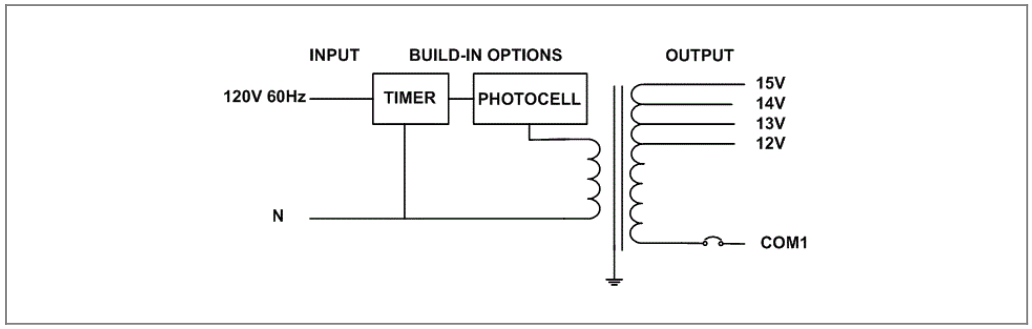

Transformer

Dimmable with any LV magnetic dimmer as long as you cover dimmer's min load.
Temperature class B(130°C)
Input leads: Line cord
Output leads: Terminal Block
Magnetic manually reset secondary breaker 12.5A
Timer and photocell build in options

Housing

The actual transformer 150W is encapsulated in the enclosure
The enclosure is Stainless Steel, NEMA 3R rated
Wiring compartment has 4 knockouts sizes for 3/8 inch screw cable connectors
Enclosure Temperature does not exceed 75°C at 45°C ambient and fully loaded
Dimensions (inch): H = 17.05, W = 5.33, D = 5.5
Weight (LBs): 16.6

Electrical Parameters

Input Voltage:	**120V 60Hz**
Max. input current at full load:	**1.25A**
Output voltage without load:	**12/ 13.2/ 13.9/ 15.1VAC**
Output voltage fully loaded:	**11/ 12.2/ 13/ 14VAC**
Max. Total Wattage:	**150W**
Max. Output Current:	**12.5/ 11.5/ 10.7/ 10A**
Efficiency:	**90%**
Load regulation:	**8%**

Mailing Address: 15545 Cabrito Rd. Van Nuys, CA 91406 Tech support: Arik Nirenberg phone: 818-904-3309 cellphone: 818-269-4091
Fax: 818 904 3327 info@emcod.com techsupport@emcod.com